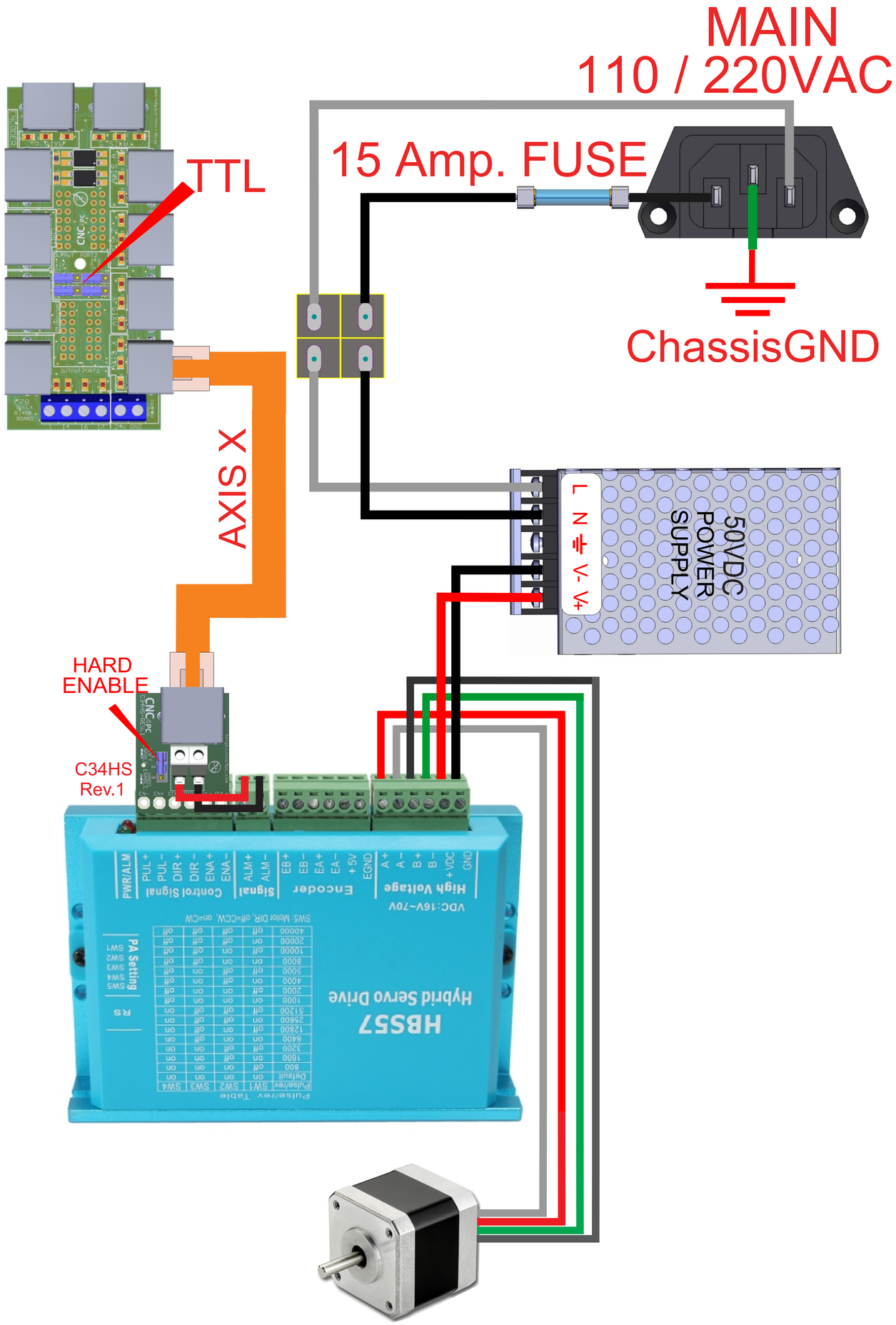

C76

ERROR
AXIS X

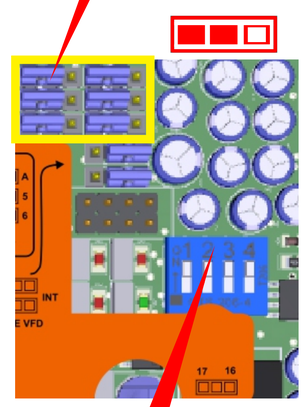

SW1=ON
SW2=ON
SW3=OFF
SW4=OFF

M16D

ERROR
AXIS X

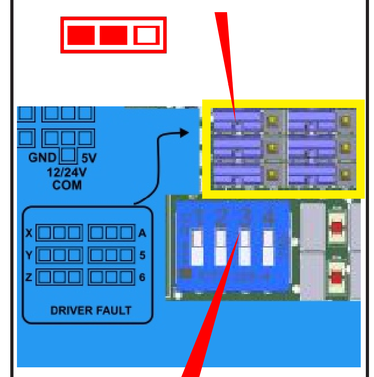

SW1=ON
SW2=ON
SW3=OFF
SW4=OFF

C82

ERROR
AXIS X

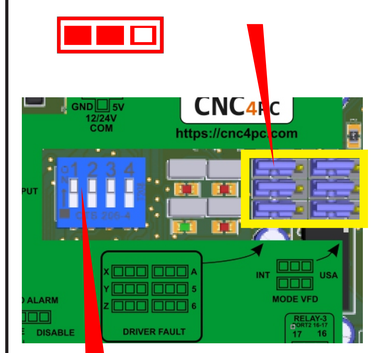

SW1=ON
SW2=ON
SW3=OFF
SW4=OFF

STRAIGH-THRU 568B UTP CABLE

CNC4PC
Integration Solutions for CNC Projects
http://www.cnc4pc.com

Designed : JPM	Date: OCTOBER-25-2018
Revised: YAC	Date: OCTOBER-25-2018
Item: WS_62	Ver.: 1

Description :
Wiring for C76, M16D, C82 With MicroSteP Driver
LEADSHINE HYBRID SERVO DRIVE

Note :
This wiring is just to illustrate a sample product application.
Specific wiring may vary from system to system.
It is the users responsibility to implement it correctly.