WIRING DIAGRAM FOR THE SPEED CONTROLLER OF THE MINARIK MM SERIES

Voltage follower connection

Instead of using a speed adjust potentiometer, the drive may be wired to follow a 0-5 VDC analog input voltage signal that is isolated from earth ground (Figure 7). Connect the signal reference (+) to S2. Connect the signal common (–) to INH2. Make no connection to S3.

A potentiometer can be used to scale the analog input voltage. An interface device, such as Minarik model PCM4, may be used to scale and isolate an analog input voltage.

The final voltage must be adjusted to 5vdc.

This connection is described on pg.15 of the manual. Connect the analog output to S2 and GND to INH2.

12VDC TO POWER THE BOARD.
To keep optoisolation, this current must come from the VFD, or a source different from the what is powering your other devices.

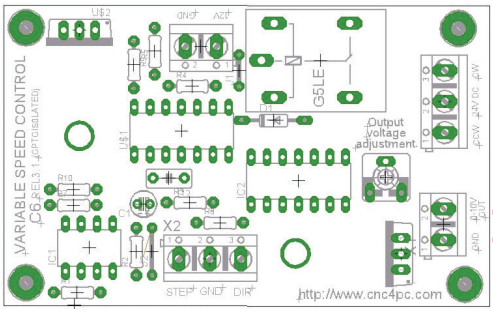

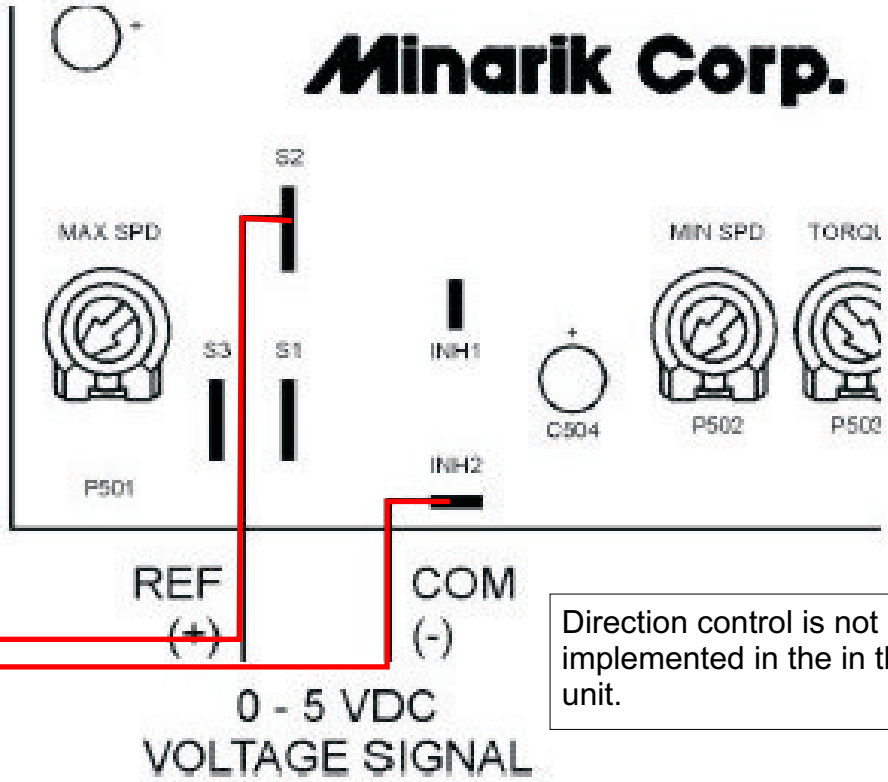

Direction control is not implemented in the in this unit.

STEP, DIRECTION, AND GND FROM THE PARALLEL PORT OR BREAKOUT BOARD

Figure 7. Voltage Follower Connection for MM31002A and MM32002A Series Drives